Equipment

Tecan Fluent 780

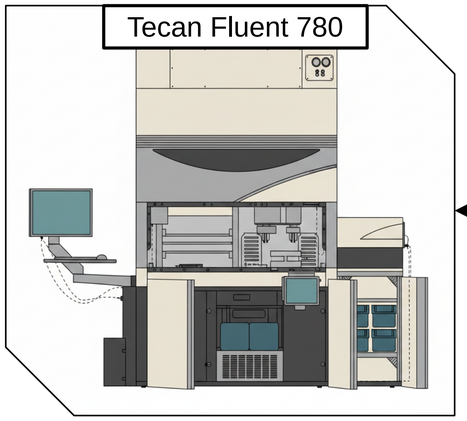

S&P BM3-BC

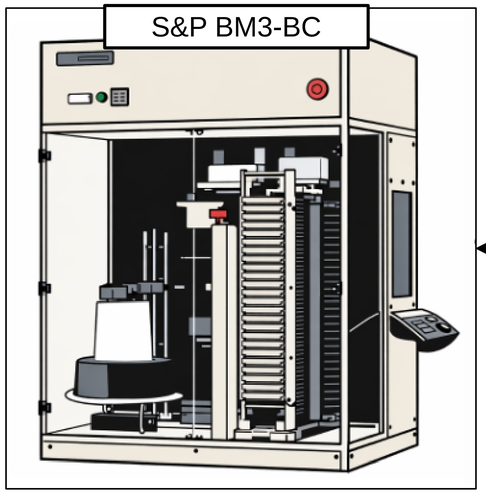

S&P SPImager

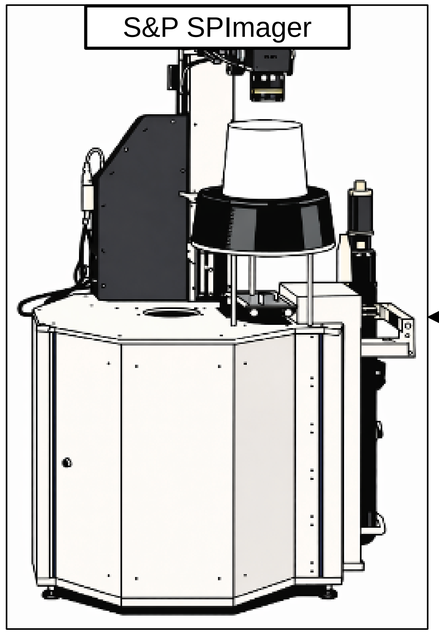

Workflow

Experimental Design

User supplies strains

Strains are grown and normalized

Stamp Replication

Time-lapse image taking

Image analysis using PhenoTypic Software

Image data delivery

Output

Experimental design

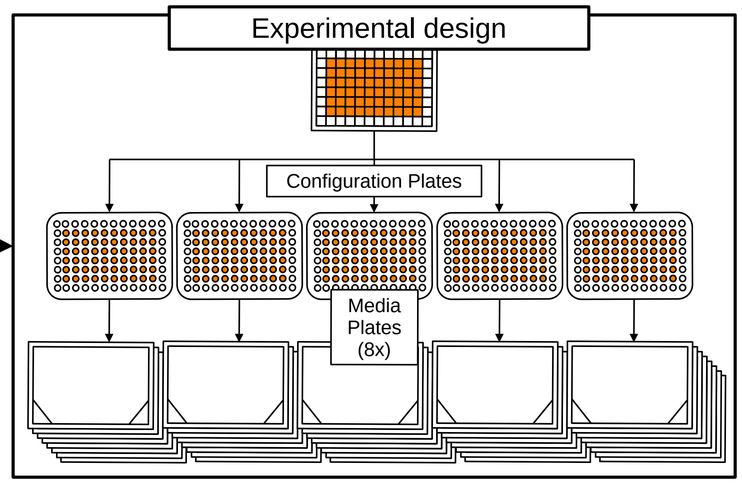

Arrayed and pinned samples

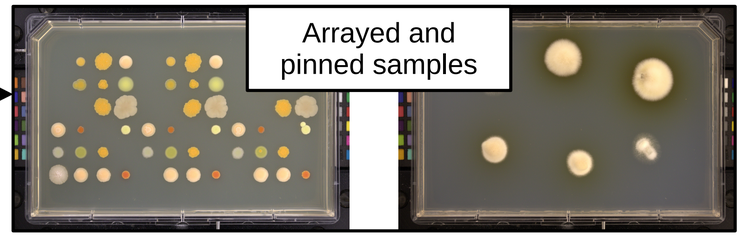

Time Series

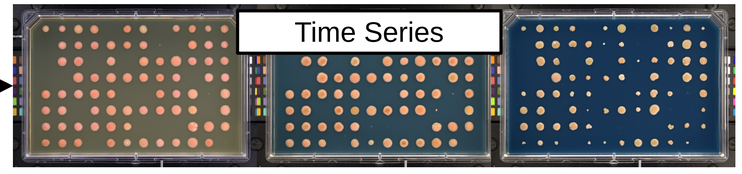

Dataset QC

